Cambridge International AS & A Level

Cambridge International Examinations
Cambridge International Advanced Subsidiary and Advanced Level

CANDIDATE NAME

CENTRE NUMBER

CANDIDATE NUMBER

0149327705

PHYSICS **9702/52**

Paper 5 Planning, Analysis and Evaluation **May/June 2018**

1 hour 15 minutes

Candidates answer on the Question Paper.

No Additional Materials are required.

READ THESE INSTRUCTIONS FIRST

Write your Centre number, candidate number and name on all the work you hand in.
Write in dark blue or black pen.
You may use an HB pencil for any diagrams or graphs.
Do not use staples, paper clips, glue or correction fluid.
DO **NOT** WRITE IN ANY BARCODES.

Answer **all** questions.

Electronic calculators may be used.
You may lose marks if you do not show your working or if you do not use appropriate units.

At the end of the examination, fasten all your work securely together.
The number of marks is given in brackets [ ] at the end of each question or part question.

This document consists of **8** printed pages.

© UCLES 2018

CAMBRIDGE International Examinations

1 A student is investigating the reflection of light from a compact disc (CD), as shown in Fig. 1.1.

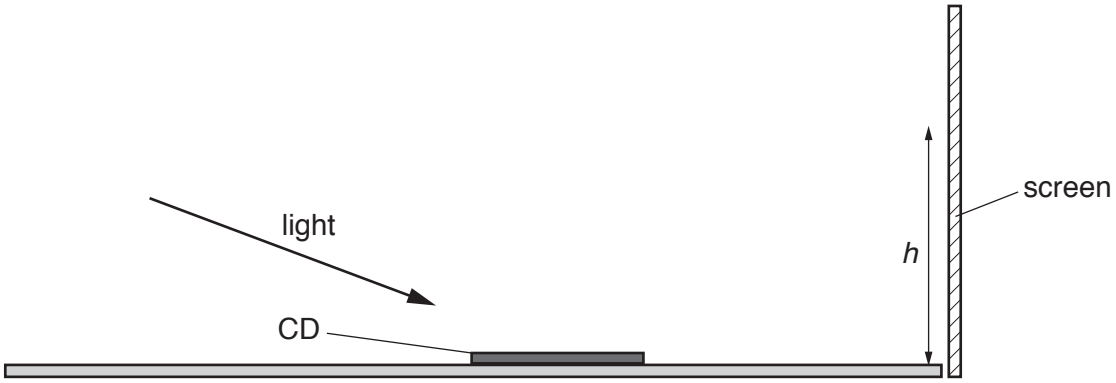

Fig. 1.1

The student observes on the screen a pattern of maxima and minima which is similar to that produced by a diffraction grating. The distance h is measured to one of the maxima.

It is suggested that the relationship between h and the wavelength λ of the incident light is

$$h = \frac{n\lambda}{d} + B$$

where n is the order of the maximum and d and B are constants.

Design a laboratory experiment to test the relationship between h and λ.
Explain how your results could be used to determine values for d and B.

You should draw a diagram, on page 3, showing the arrangement of your equipment. In your account you should pay particular attention to

- the procedure to be followed,
- the measurements to be taken,
- the control of variables,
- the analysis of the data,
- any safety precautions to be taken.

© UCLES 2018

Diagram

.....

.....

.....

2 A student is investigating the charging of a capacitor. A circuit is set up as shown in Fig. 2.1.

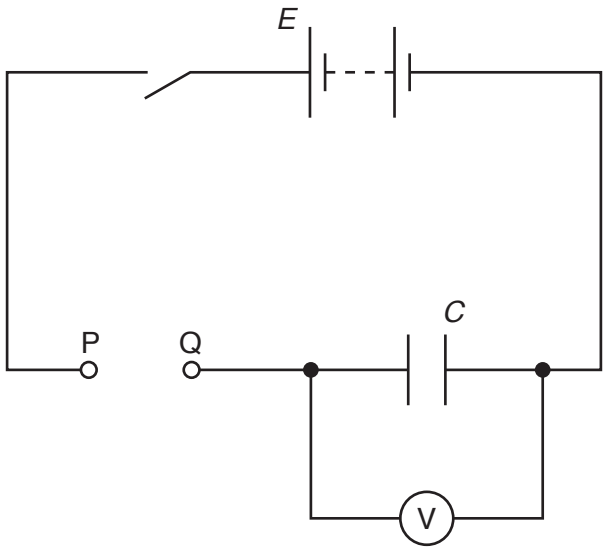

Fig. 2.1

The capacitor is initially discharged. A resistor of resistance R is connected between P and Q. When the switch is closed, the time t for the voltmeter reading to increase to a specific value V is measured. The capacitor is then discharged.

The experiment is repeated with a different number n of resistors each of resistance R connected in series between P and Q.

It is suggested that t and n are related by the equation

$$1 - \frac{V}{E} = e^{-\left(\frac{t}{nRC}\right)}$$

where E is the electromotive force (e.m.f.) of the power supply and C is the capacitance of the capacitor.

(a) A graph is plotted of t on the y-axis against nR on the x-axis.

Determine an expression for the gradient.

gradient = ... [1]

(b) Values of n and t are given in Fig. 2.2.
Each resistor has a resistance R of 4.7 kΩ ± 10%.

n	t / s	
1	15.8	
2	34.8	
3	50.8	
4	66.8	
5	83.8	
6	97.2	

Fig. 2.2

Calculate and record values of $nR/10^3\,\Omega$ in Fig. 2.2.
Include the absolute uncertainties in nR. [2]

(c) **(i)** Plot a graph of t/s against $nR/10^3\,\Omega$.
Include error bars for nR. [2]

(ii) Draw the straight line of best fit and a worst acceptable straight line on your graph. Both lines should be clearly labelled. [2]

(iii) Determine the gradient of the line of best fit. Include the absolute uncertainty in your answer.

gradient = ... [2]

© UCLES 2018

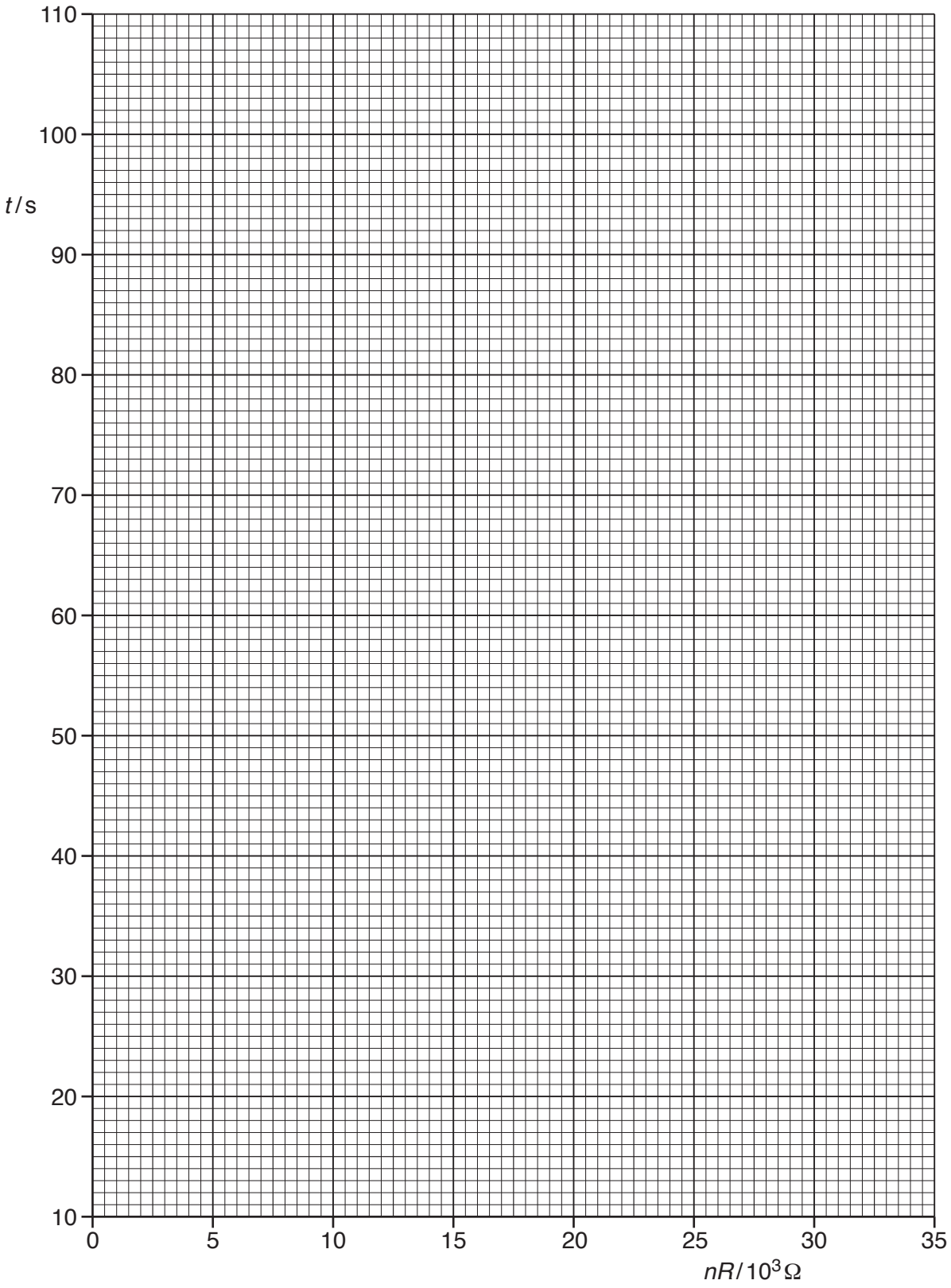
110
100
t / s
90
80
70
60
50
40
30
20
10
0
5
10
15
20
25
30
35
nR / 10^3 Ω

(d) (i) Using your answers to **(a)** and **(c)(iii)**, determine the value of C. Include an appropriate unit.

Data: $E = 5.0\,\text{V}$
$V = 4.0\,\text{V}$

$C =$ ..... [3]

(ii) Determine the percentage uncertainty in C.

percentage uncertainty in $C =$ ..... % [1]

(e) The experiment is repeated using the same capacitor. Determine the resistance K of the single resistor that is required so that the time for the voltmeter reading to reach 90% of the e.m.f. of the power supply is 5.0 minutes. Include the absolute uncertainty in your answer.

$K =$ ..... Ω [2]

[Total: 15]

To avoid the issue of disclosure of answer-related information to candidates, all copyright acknowledgements are reproduced online in the Cambridge International Examinations Copyright Acknowledgements Booklet. This is produced for each series of examinations and is freely available to download at www.cie.org.uk after the live examination series.

© UCLES 2018